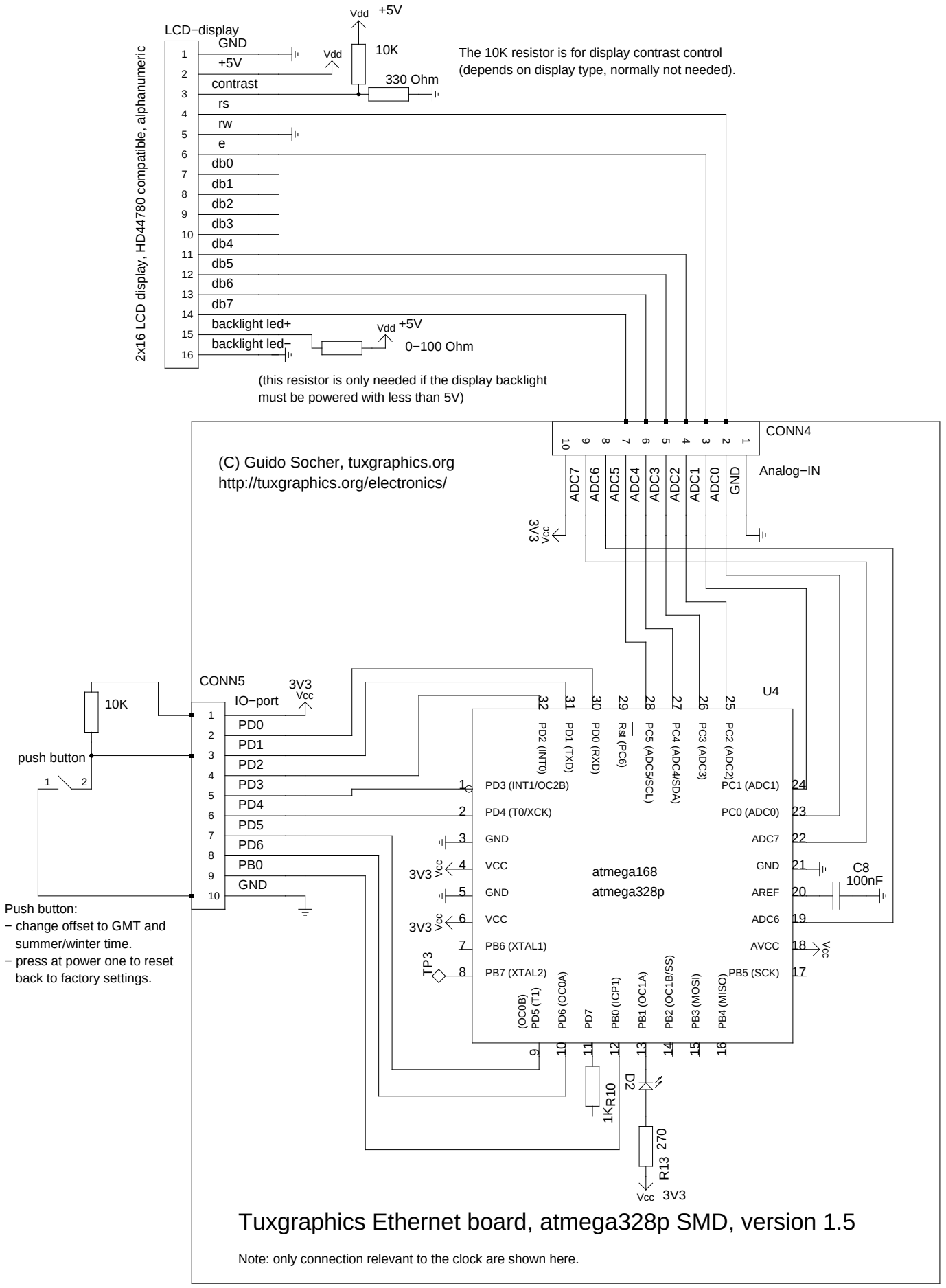Tuxgraphics NTP clock version 2.0