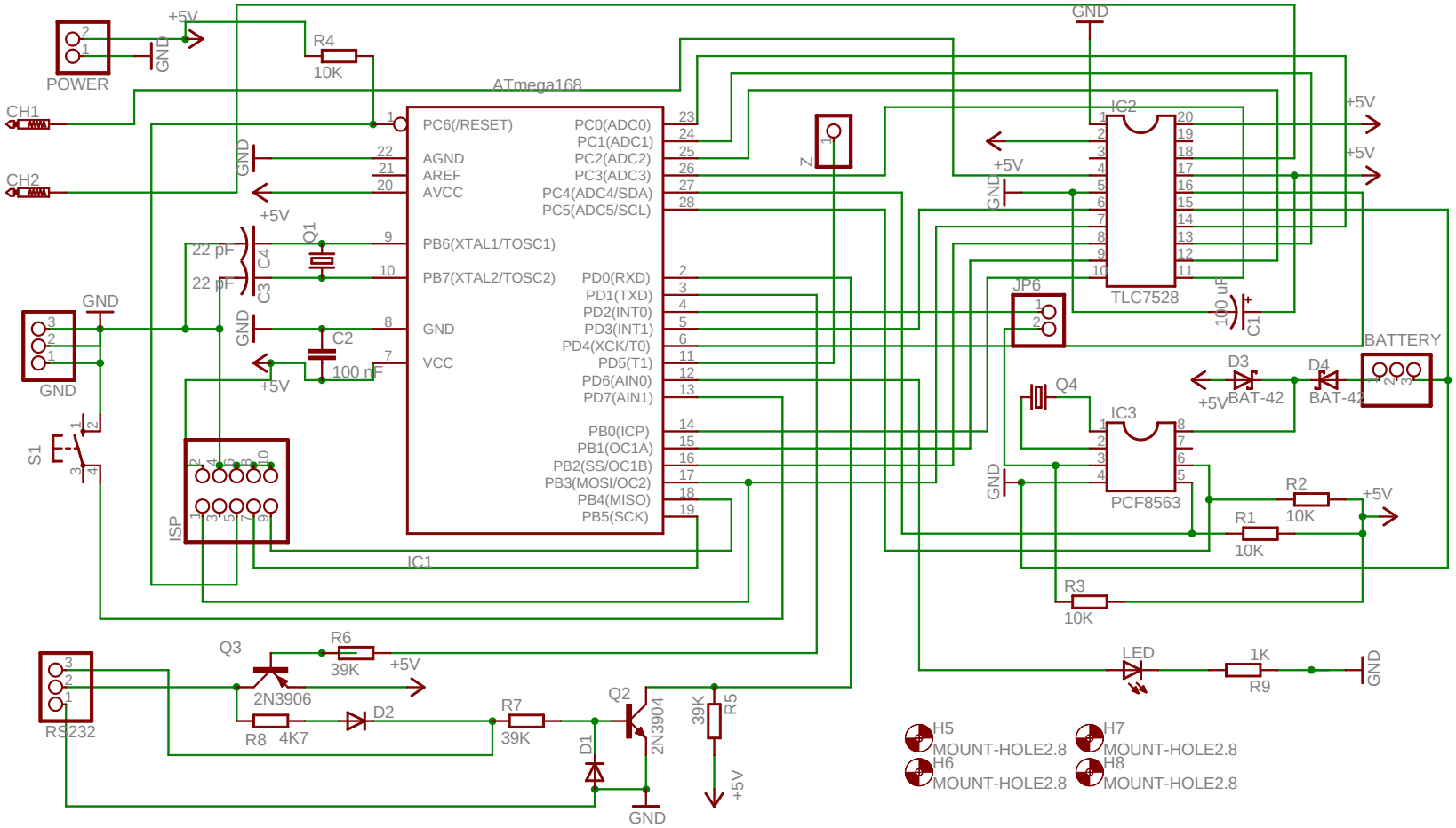

TITLE: Oclock2.0

Document Number:

REV:

Date: 4/03/2007 21:58:56

Sheet: 1/1